# United States Patent

Girard, Peter F.

[15] 3,703,998

[45] Nov. 28, 1972


[54] **DRONE AIRCRAFT WITH TELESCOPIC FUSELAGE**


[72] Inventor: **Peter F. Girard,** La Mesa, Calif.

[73] Assignee: **Teledyne Ryan Aeronautical Company,** San Diego, Calif.



[22] Filed: **Dec. 28, 1970**

[21] Appl. No.: **101,558**

[52] **U.S. Cl.** .....**244/13,** 244/2, 244/135 B

[51] **Int. Cl.** .....**B64c 1/28,** B64c 3/56

[58] **Field of Search**.....244/13, 137, 118, 135 B, 244/135 A, 135 C, 2, 138, 42 DB, 3.26, 3.28; 102/4, 6, 49.7, 67



[56] **References Cited**

UNITED STATES PATENTS

| | | | |
|---|---|---|---|
| 2,876,677 | 3/1959 | Clark et al. | 244/2 |
| 3,005,406 | 10/1961 | Ronfeldt | 102/6 |
| 3,494,284 | 2/1970 | Gross | 102/67 |
| 2,755,046 | 7/1956 | Underwood | 244/135 C |
| 3,021,855 | 2/1962 | Cartwright et al. | 244/135 C |
| 3,136,507 | 6/1964 | Erlanger et al. | 244/135 B |
| 2,620,147 | 12/1952 | Butler et al. | 244/42 DB |



*Primary Examiner*—George E. A. Halvosa
*Assistant Examiner*—Stephen G. Kunin
*Attorney*—Carl R. Brown, Stephen L. King and Kenneth W. Mateer



[57] **ABSTRACT**

A drone type aircraft having a telescopic fuselage and folding aerodynamic surfaces to facilitate installation in a limited capacity bomb bay or storage compartment of a launch aircraft. Prior to launch, the drone is lowered from the aircraft on a supporting frame, the aerodynamic surfaces are extended, and the nose section of the fuselage is extended. The added fuselage capacity is used as fuel tankage, which is filled from the launch aircraft to increase the operating range of the drone.


**5 Claims, 6 Drawing Figures**

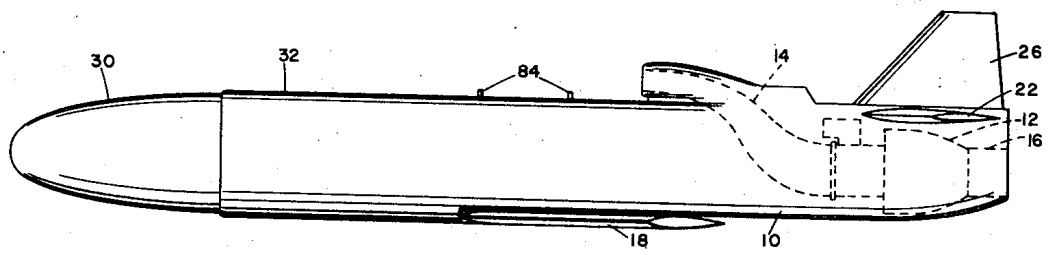

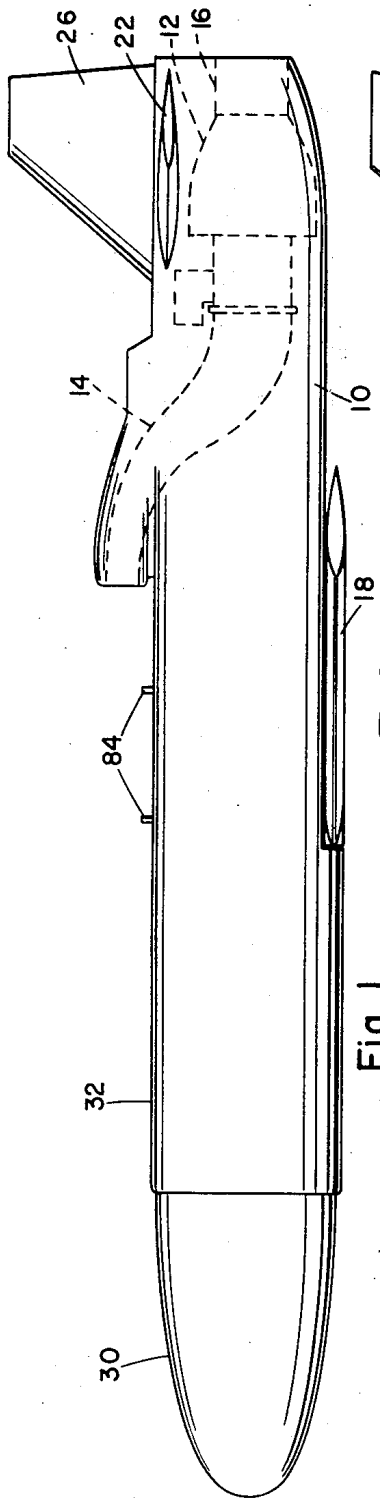


Fig. 1

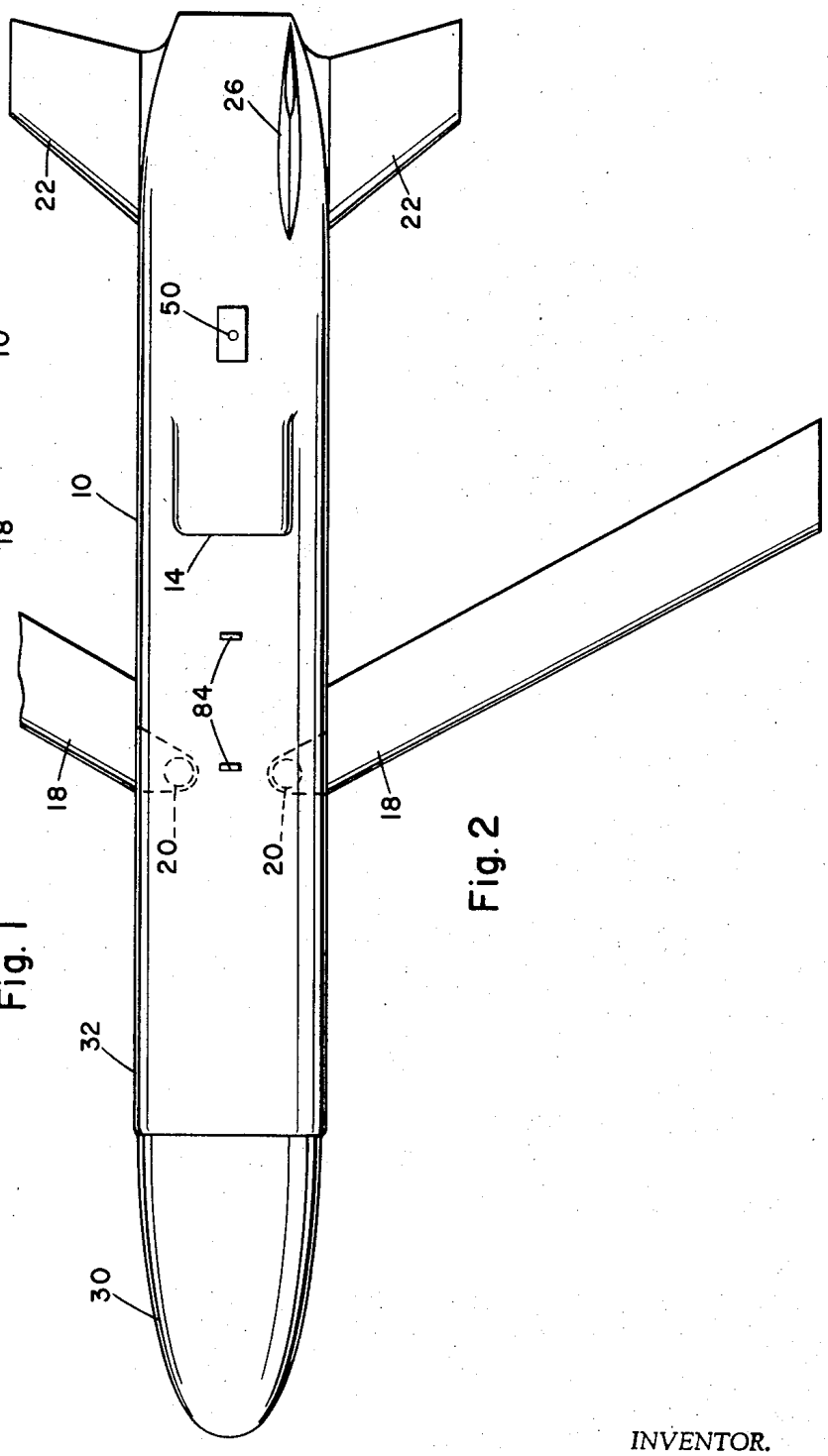


Fig. 2

INVENTOR.
PETER F. GIRARD

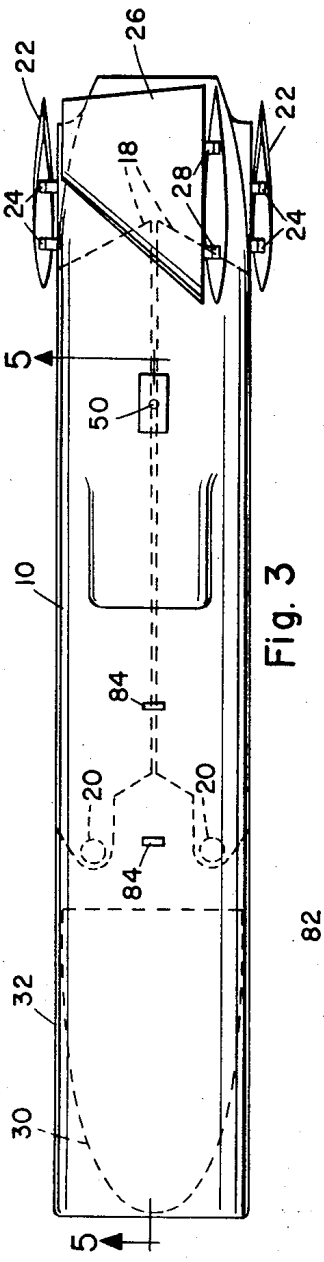


Fig. 3

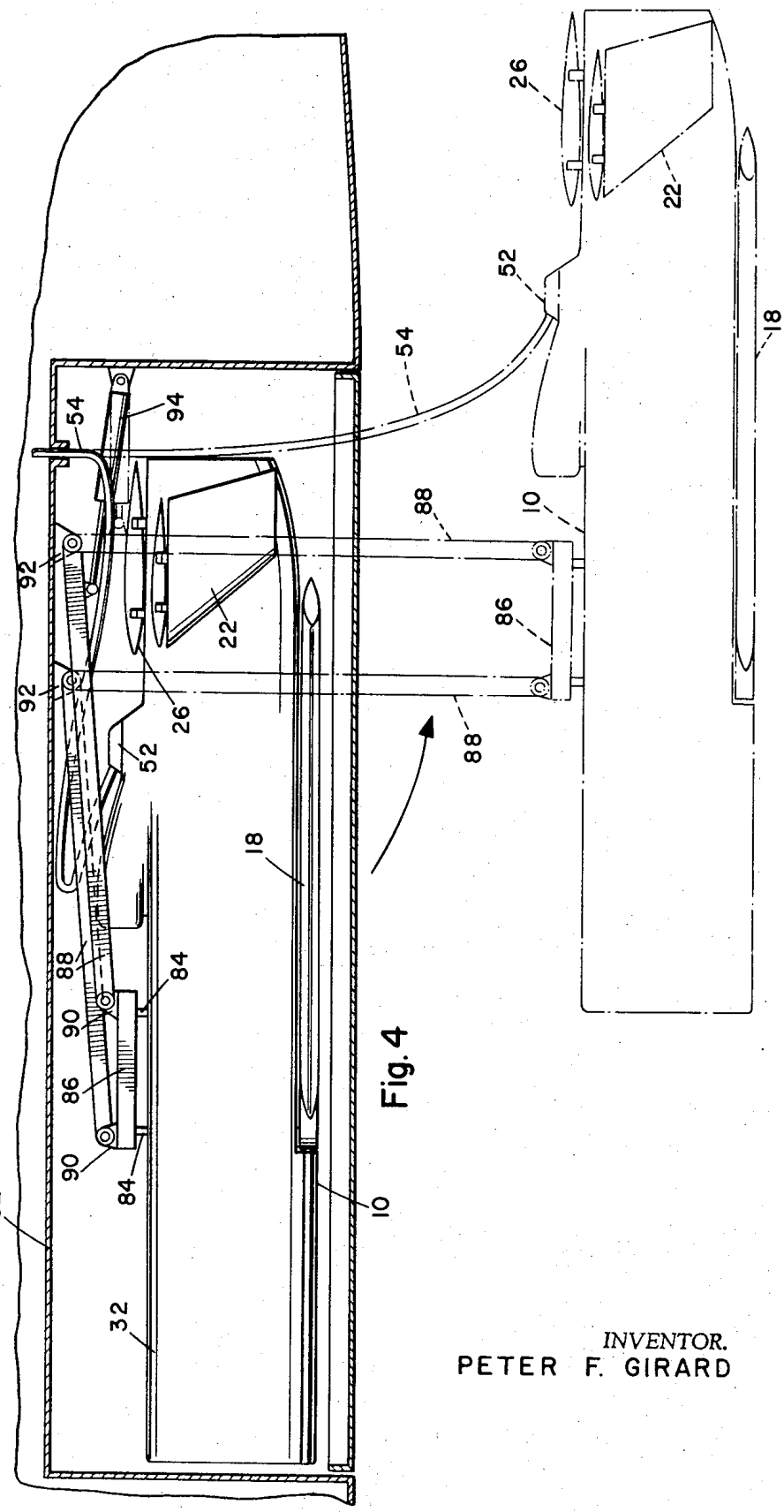


Fig. 4

INVENTOR.
PETER F. GIRARD

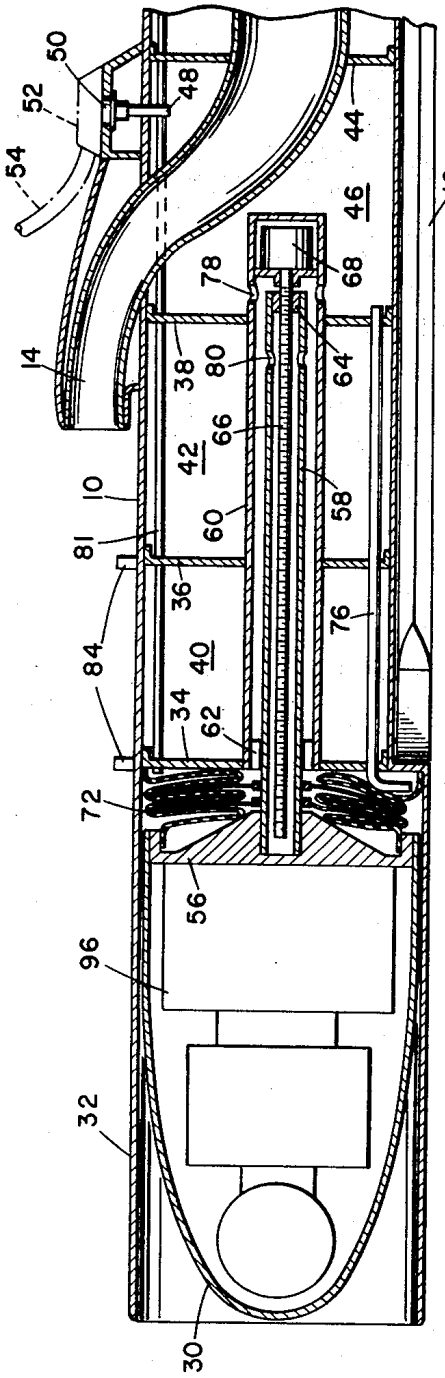


Fig. 5

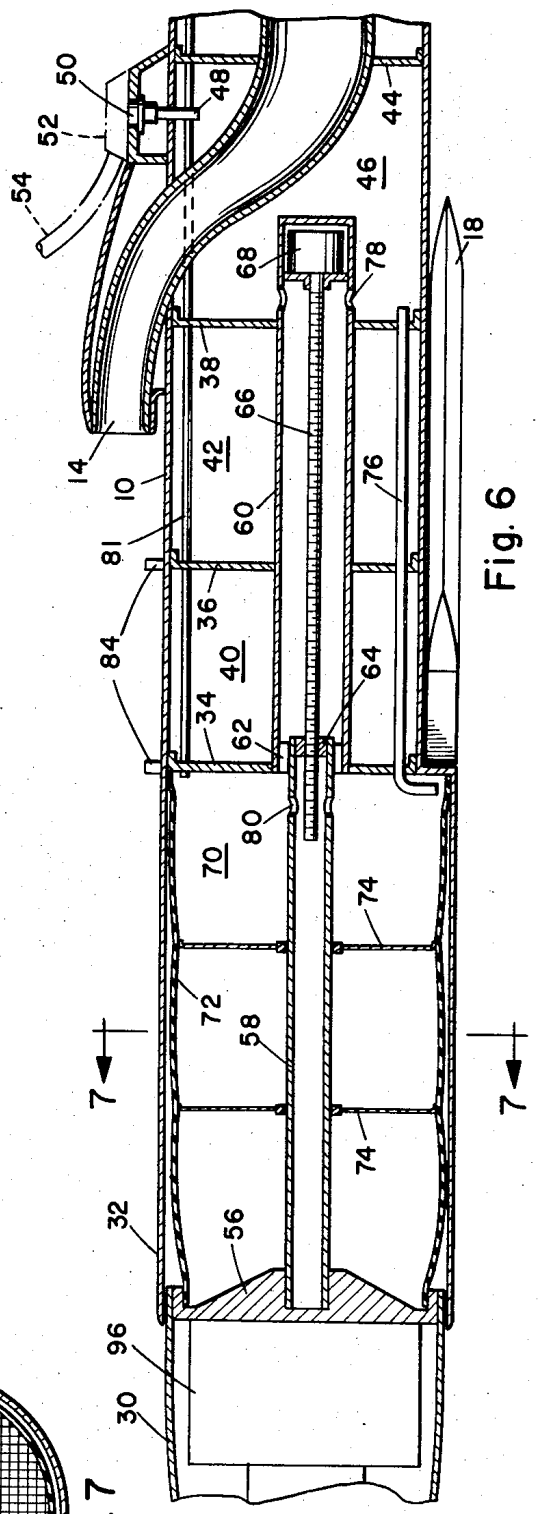


Fig. 6

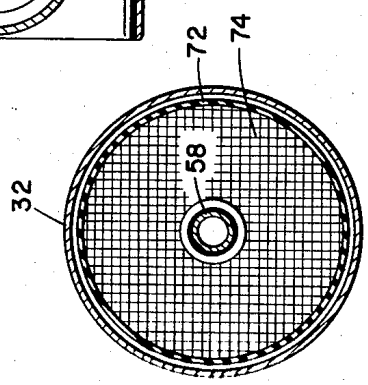


Fig. 7

INVENTOR.
PETER F. GIRARD

# DRONE AIRCRAFT WITH TELESCOPIC FUSELAGE

## BACKGROUND OF THE INVENTION

Remotely controlled or drone aircraft have been carried by launch aircraft and released near the required zone of operation. To reduce complexity and cost, such drones are usually small and have limited range. When a drone is carried externally on a launch aircraft, size is not critical, but in high performance aircraft in which the drone must be stowed internally, there is a necessary compromise between size and fuel capacity. Folding fins and other aerodynamic surfaces are well known in aircraft and missiles for minimizing size in stored condition, but the bulk and capacity of the body or fuselage is the factor which limits the range and useful life of the drone.

## SUMMARY OF THE INVENTION

The drone aircraft described herein has foldable aerodynamic surfaces to minimize overall size in storage, and the significant feature is a telescopic nose portion incorporated in the fuselage to reduce the length considerably when retracted. With all elements folded or retracted, the drone will fit into a bomb bay or other storage compartment of reasonable size, and is supported by hinged arm structure. For launching, the drone is lowered on the arms to a position below the launch aircraft and the aerodynamic surfaces are extended. The telescopic nose portion is then extended and the vacated portion of the fuselage becomes a fuel tank, with a fuel retaining bladder lining which unfolds as the nose extends. Fuel is pumped into the added tank space from the launch aircraft and the drone is ready for flight, with greatly increased range capability. The added tank space near the nose is connected to aft tank space in the basic drone structure, so that the center of gravity of the drone does not shift appreciably as fuel is consumed. Various types of drones are adaptable to the arrangement, the structure being simple and the associated actuating means being contained in the drone.

The primary object of this invention, therefore, is to provide a new and useful drone aircraft with a telescopic fuselage.

Another object of this invention is to provide a drone aircraft having a telescopic nose portion and folding aerodynamic surfaces, enabling the drone to be carried in a small bomb bay or compartment of a launch aircraft.

Another object of this invention is to provide a drone aircraft in which the telescopic nose portion extends to form a fuel tank, which is filled from the launch aircraft immediately prior to launching the drone.

Other objects and many advantages of this invention will become more apparent upon a reading of the following detailed description and an examination of the drawings wherein like reference numerals designate like parts in which:

FIG. 1 is a side elevation view of a typical drone aircraft in flight condition.

FIG. 2 is a top plan view thereof.

FIG. 3 is a top plan view of the drone with the nose retracted and aerodynamic surfaces folded.

FIG. 4 is a side elevation view of the drone in an aircraft bomb bay, shown in section, and showing the supporting arm action.



FIG. 5 is an enlarged sectional view taken on line 5—5 of FIG. 3.

FIG. 6 is a similar sectional view, but with the nose extended.

## DESCRIPTION OF THE PREFERRED EMBODIMENT

The drone aircraft shown is an example, the specific configuration and the arrangement of the aerodynamic components being variable to suit particular uses and performance requirements. The drone comprises a generally cylindrical fuselage **10**, in the rear of which is a turbojet propulsion engine **12** with an air intake duct **14** and a rearwardly opening tailpipe **16**. Wings **18** are mounted below the fuselage and swing about hinges **20** to fold under the fuselage in side by side relation. On the rear portion of the fuselage are horizontal stabilizer surfaces **22**, mounted on hinges **24** to fold downwardly at the sides of the fuselage. On top is a fin **26** attached by hinges **28** to fold downwardly across the top of the fuselage. Any suitable actuating means such as springs or powered devices may be used to extend the aerodynamic components when required. Also, any suitable arrangement of control surfaces and actuating means may be used, various systems being well known.

The streamlined nose **30** is longitudinally slidable in the forward portion **32** of fuselage **10** and is fully extended forwardly in normal flight. Inside the fuselage are a forward bulkhead **34** and two rearwardly spaced bulkheads **36** and **38** enclosed equipment bays **40** and **42**. Between bulkhead **38** and a further rear bulkhead **44** is an aft fuel tank **46**. On top of the fuselage is a filler neck **48** leading into tank **46**, the filler neck having an external connector **50** for attachment of a conventional filler head **52** on an umbilical fuel hose **54**.

The rear end of nose **30** is closed by a bulkhead **56** suitably reinforced to support the nose on an axially rearwardly extending support tube **58**, which is slidable in a sleeve **60** fixed axially through bulkheads **34**, **36** and **38**. At bulkhead **34** the tube **58** slides in a bearing **62**, the rear end of the tube containing a nut collar **64** which runs on a threaded rod **66** extending axially within the tube. The threaded rod **66** is rotatably driven by a motor **68**, sealed in the rear end of sleeve **60**, to provide a screw jack action for extending the nose longitudinally, as in FIG. **6**. In the stowed position, shown in FIG. **5**, the nose is completely retracted into forward portion **32**. As the nose **30** is extended, the interior of the forward portion **32** becomes a large compartment, which is made into a forward fuel tank **70** by means of a flexible bladder **72**. The bladder, of suitable fuel impervious material, is a tubular element with the ends secured peripherally to the nose bulkhead **56** and forward bulkhead **34**. In stowed condition the bladder **72** is accordion folded, as in FIG. **5** and is pulled open by motion of the nose. Porous baffles **74**, sliding along tube **58** provide interior support to the extended bladder. The front and rear fuel tanks **70** and **46** are connected at their lower portions by a transfer pipe **76** to maintain a balance of fuel, which is supplied through filler neck **48**. Ports **78** in the sleeve **60** in the rear fuel tank section allow fuel to pass along the sleeve and through openings in the bearing **62** to the forward fuel tank, in addition to the transfer pipe, thus accelerating the filling operation. Ports **80** in the tube **58** permit the

interior of the tube to be used as additional tank space. To ensure proper filling and subsequent removal of the fuel, a vent pipe **81** extends from forward fuel bank **70** to a suitable high point on the drone, such as at the top of the extended fin **26**.

The drone is normally carried in an aircraft bomb bay **82**, or similar compartment, shown in section in FIG. **4**. Lugs **84** are provided on top of fuselage **10** for attachment to a shackle or cradle **86**, in the manner of a conventional bomb or store. The drone is suspended on parallel arms **88** pivotally connected between brackets **90** on the cradle **86** and brackets **92** in the bomb bay **82**. An actuator **94** holds the arms **88** in the upper or folded position with the drone stowed inside the bomb bay, as in the full line position in FIG. **4**. Immediately prior to launch, the actuator lowers the arms to hold the drone below and clear of the aircraft, as in the broken line position. The payload **96**, indicated in nose **30**, can be a warhead or any particular equipment for a required operation.

In a typical mission the drone is carried to the vicinity of its destination in the bomb bay of the launch aircraft. For launching the drone is lowered below the aircraft and the nose **30** is extended. Fuel is then pumped from a source, not shown, in the launch aircraft, through hose **54** and filler head **52**, to fill the drone's tanks to the required level, then the filler head is disconnected. The wings and tail surfaces are then extended and engine **12** is started. When all equipment is functioning properly, the drone is released from cradle **86** and begins free flight. Normally some type of conventional guidance or remote control means will be used to guide the drone during flight, over the extended range made possible by the additional fuel.



Having described my invention, I now claim.

**1**. A drone aircraft having a fuselage, with aerodynamic lifting and control surfaces thereon;

said fuselage having a nose portion telescopically movable between a retracted position within the fuselage and an extended position forming the nose of the fuselage;

drive means mounted in said fuselage and connected to said nose portion for moving the nose portion the full distance between the two positions;

the internal portion of said fuselage vacated by said nose portion in the extended position comprising a forward fuel tank;

and filling means communicating with said forward fuel tank, said filling means having an external connection for coupling to a source of fuel.

**2**. A drone aircraft according to claim **1**, wherein said fuselage has a tubular sleeve longitudinally fixed therein, said nose portion having a rearwardly extending support tube axially slidable in said sleeve, said drive means comprising actuating means connected to said tube for extension and retraction of the nose portion.

**3**. A drone aircraft according to claim **2**, wherein said forward fuel tank has a flexible fuel containing bladder therein, said bladder being folded in the retracted position of the nose portion and being connected to the nose portion to extend therewith.

**4**. A drone aircraft according to claim **3**, wherein said fuselage has an aft fuel tank, said sleeve forming a fuel conducting connection between said fuel tanks.

**5**. A drone aircraft according to claim **4**, wherein said filling means is in said aft fuel tank.

* * * * *